Beta

6600M/223

066000223

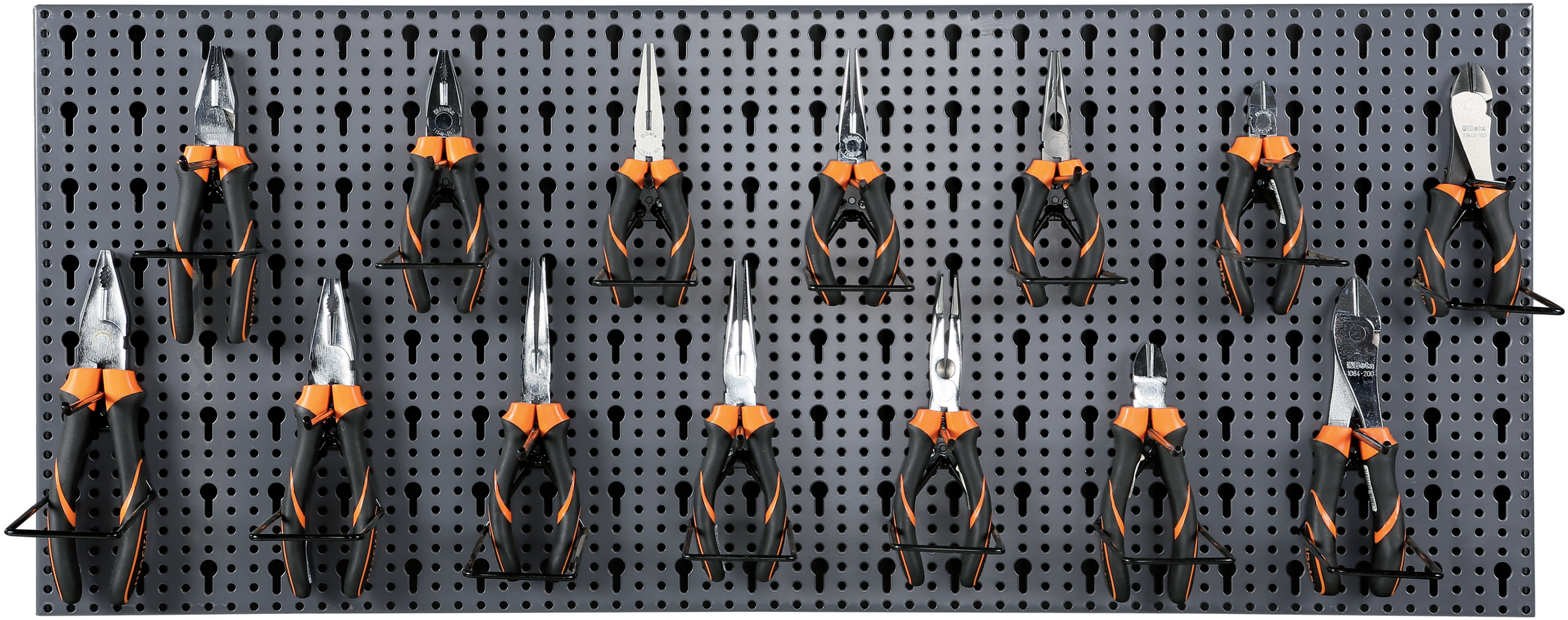

M2100364

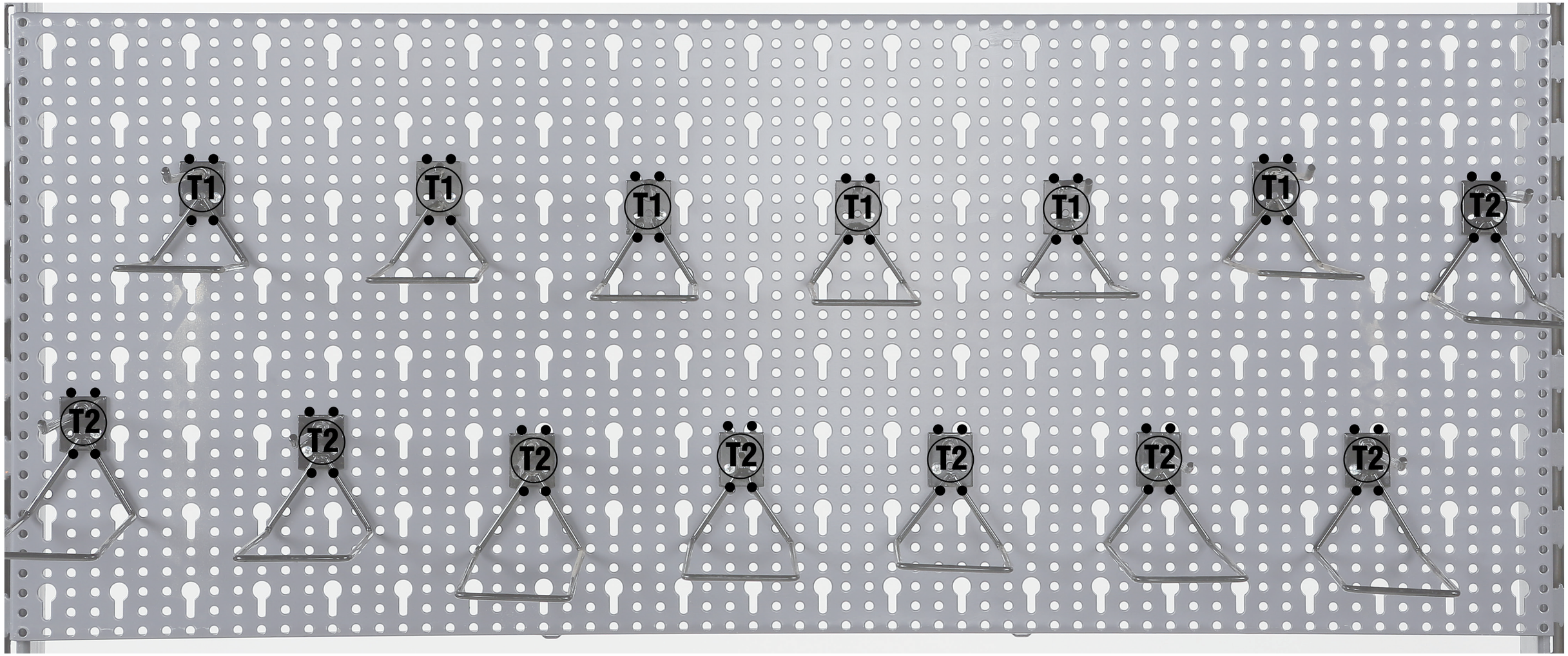

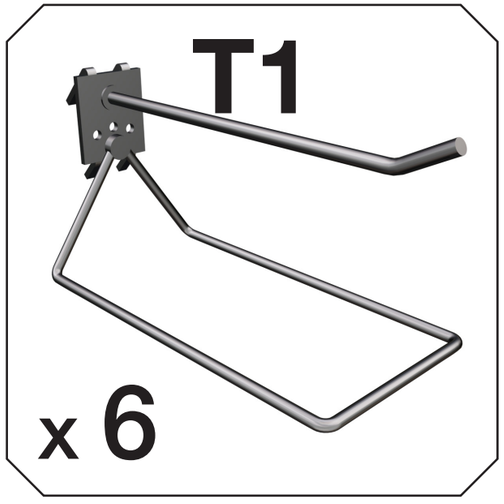

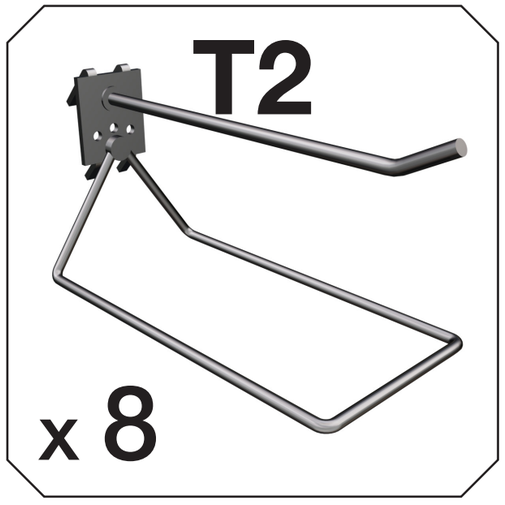

Beta