1088BM-HS Kopkniptangen twee componenten handgreep H-SAFE

UNI/ISO 5748
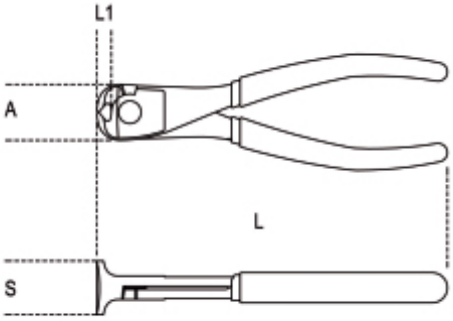
	art.	L mm	L1 mm	mm	A mm	S mm	g
010884036	1088BM-HS 160	160	9	1,6	28,0	11,0	230
010884040	1088BM-HS 200	200	11	2,0	36,0	13,0	370