1092V Alicate de corte frontal reforzado, tipo pesado

UNI/ISO 5748
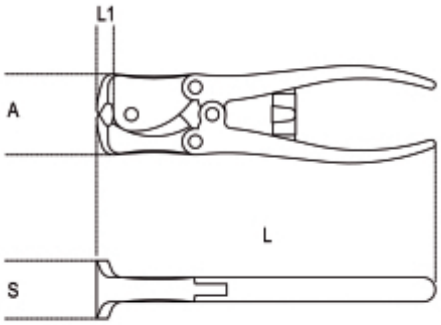
	art.	L mm	L1 mm	mm	A mm	A1 mm	g
010920280	1092V 180	180	8	2,0	45,0	33,0	450
010920310	1092V 200	200	9	2,5	48,0	34,0	610