# 1168BM-HS extra long bent needle knurled nose pliers, bi-material handles H-SAFE

ISO 5745

with H-SAFE tethered system
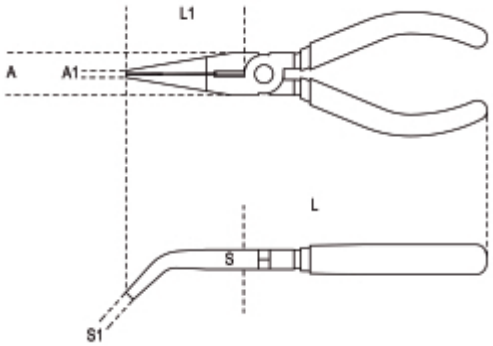
| | art. | L mm | L1 mm | mm | A mm | A1 mm | S mm | S1 mm | g |
|---|---|---|---|---|---|---|---|---|---|
| **011684040** | 1168BM-HS 200 | 200 | 70 | 1,6 | 22,0 | 5,0 | 11,0 | 4,0 | 210 |