1168 Alicates de pontas curvas semirredondas extralongas, cromados, punhos antiderrapantes revestidos com camada dupla de PVC

ISO 5745
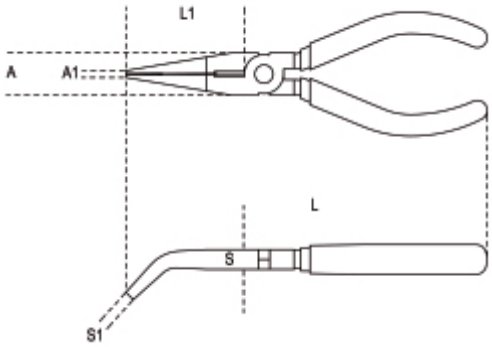
	art.	L mm	L1 mm	mm	A mm	A1 mm	S mm	S1 mm	g
011680006	1168 160	160	54	1,6	19,0	2,5	9,0	3,2	110
011680010	1168 200	200	76	1,6	22,0	5,0	11,0	4,0	180