900AS/L Dopsleutels zeskant, lange uitvoering

1/4" SAE AS 954E
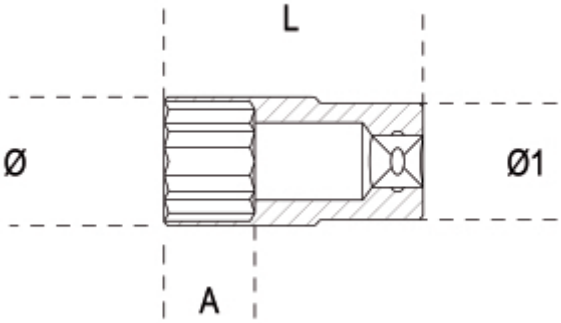
	art.	"	Ø mm	L mm	Ø1 mm	A mm	g
009000301	900AS-L 3/16	3/16	7,0	50	12,0	5,0	20
009000303	900AS-L 7/32	7/32	8,5	50	12,0	6,0	24
009000305	900AS-L 1/4	1/4	9,8	50	12,0	7,0	20
009000307	900AS-L 9/32	9/32	10,5	50	12,0	7,0	25
009000309	900AS-L 5/16	5/16	12,0	50	12,0	8,0	29
009000311	900AS-L 11/32	11/32	13,0	50	13,0	9,0	28
009000313	900AS-L 3/8	3/8	14,0	50	14,0	10,0	37
009000315	900AS-L 7/16	7/16	16,0	50	16,0	11,0	49
009000317	900AS-L 1/2	1/2	17,5	50	17,5	13,0	60
009000319	900AS-L 9/16	9/16	20,0	50	20,0	13,0	74