910AS/L chaves de caixa série longa, boca de 12 faces

3/8"
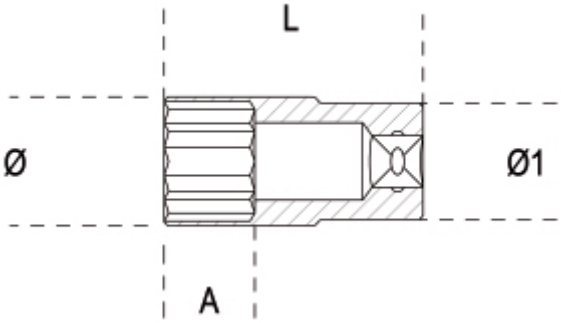
	art.	"	Ø mm	L mm	Ø1 mm	A mm	g
009100350	910AS-L 1/4	1/4	10	55	17	7,0	44
009100351	910AS-L 5/16	5/16	12	55	17	7,0	49
009100352	910AS-L 3/8	3/8	14	55	17	9,0	51
009100353	910AS-L 7/16	7/16	16	55	17	10,0	56
009100354	910AS-L 1/2	1/2	18	55	17	12,0	55
009100355	910AS-L 9/16	9/16	20	55	18	15,0	65
009100356	910AS-L 19/32	19/32	21	55	20	15,0	77
009100357	910AS-L 5/8	5/8	22	55	20	15,0	75,9
009100359	910AS-L 11/16	11/16	23	55	22	15,0	90
009100360	910AS-L 3/4	3/4	25	55	24	18,0	97
009100362	910AS-L 13/16	13/16	27	65	26	18,0	131
009100363	910AS-L 7/8	7/8	29	65	28	21,0	157