910BL Douille 12 pans série longue

3/8" UNI/ISO 2725 DIN 3124
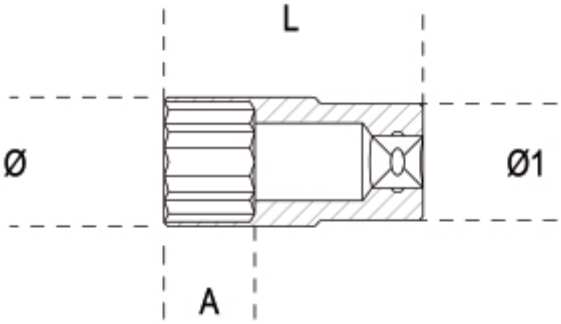
	art.	mm	Ø mm	L mm	Ø1 mm	A mm	g
009100308	910BL 8	8	12,0	55	17	7	50
009100309	910BL 9	9	13,0	55	17	7	47,8
009100310	910BL 10	10	14,5	55	17	9	51
009100311	910BL 11	11	16,0	55	17	10	54,3
009100312	910BL 12	12	17,0	55	17	12	55
009100313	910BL 13	13	18,0	55	17	12	54,8
009100314	910BL 14	14	20,0	55	18	15	66,5
009100315	910BL 15	15	21,0	55	20	15	77
009100316	910BL 16	16	22,0	55	20	15	76
009100317	910BL 17	17	23,5	55	22	15	93
009100318	910BL 18	18	24,5	55	23	18	99,9
009100319	910BL 19	19	25,0	55	24	18	98
009100321	910BL 21	21	27,0	65	26	18	128
009100322	910BL 22	22	29,0	65	28	21	156