920AS/L chaves de caixa série longa boca hexagonal

1/2"
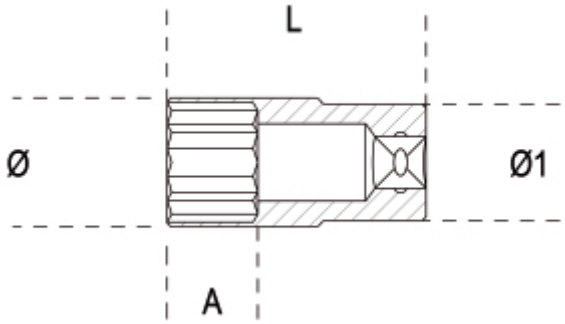
	art.	"	Ø mm	L mm	Ø1 mm	A mm	g
009200352	920AS-L 1/2	1/2	19,0	77	22	12,0	108,2
009200353	920AS-L 9/16	9/16	20,3	77	22	15,0	111,8
009200355	920AS-L 5/8	5/8	22,8	77	22	15,0	137,2
009200357	920AS-L 11/16	11/16	25,0	77	24	18,0	156
009200358	920AS-L 3/4	3/4	26,5	77	25	18,0	172,1
009200360	920AS-L 13/16	13/16	29,0	77	27	18,0	201
009200361	920AS-L 7/8	7/8	30,0	77	28	21,0	185,5
009200362	920AS-L 15/16	15/16	32,8	77	30	24,0	250
009200363	920AS-L 1	1	35,0	77	32	24,0	276
009200364	920AS-L 1.1/16	1.1/16	36,5	77	33,0	25,0	296
009200365	920AS-L 1.1/8	1.1/8	37,8	77	34	27,0	314