952AS

Chave de soquete hexagonal, articulado, com cabo em T deslizante (medidas em polegada)
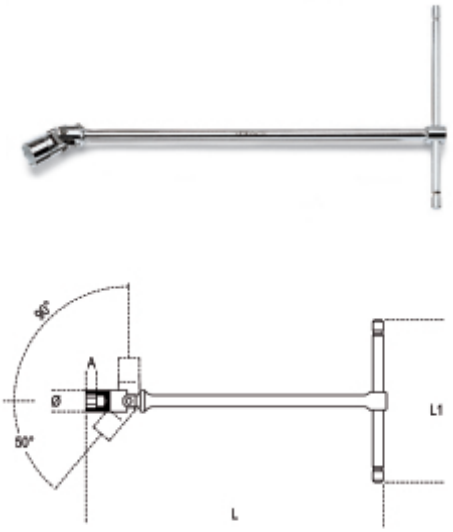
	art.	"	Ø mm	A mm	L mm	L1 mm	g
009520256	952AS 1/4	1/4	9,5	5,0	395	145	165
009520258	952AS 5/16	5/16	12,1	6,0	395	165	165
009520260	952AS 3/8	3/8	14,6	8,0	400	160	165
009520261	952AS 7/16	7/16	15,8	8,0	400	160	280
009520263	952AS 1/2	1/2	18,7	10,0	432	175	385
009520264	952AS 9/16	9/16	19,7	10,0	432	175	385
009520266	952AS 5/8	5/8	22,0	11,0	450	200	580
009520267	952AS 11/16	11/16	23,4	12,0	450	200	580
009520269	952AS 3/4	3/4	26,0	13,0	500	230	905