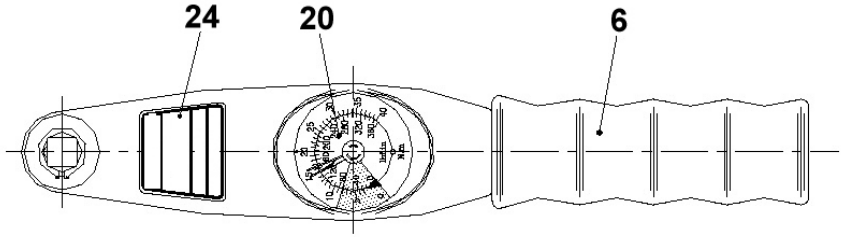

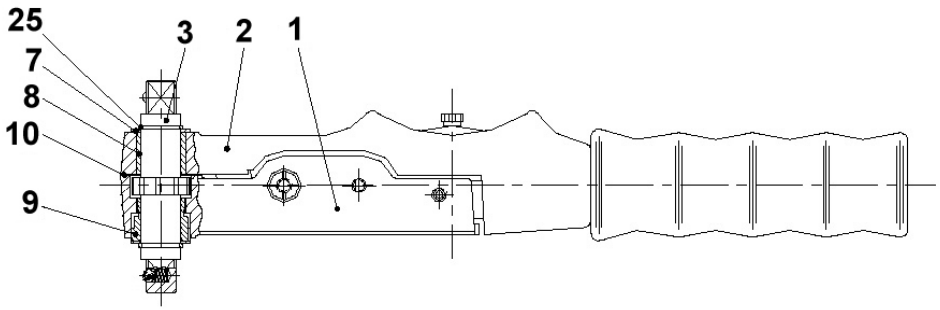

SECTION THROUGH WINDOW & RACK HOUSING

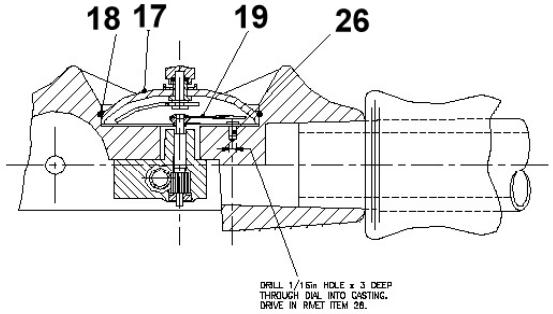

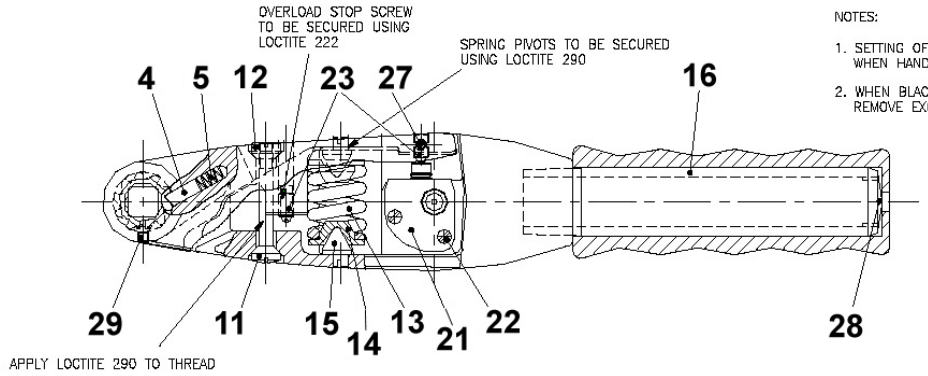

NOTES:

1. SETTING OF OVERLOAD STOP SCREW (ITEM 23) TO COME INTO CONTACT WITH STOP PAD (ITEM 24) WHEN HAND IS APPROXIMATELY 1 DIVISION PAST END OF MAX READING ON DIAL.
2. WHEN BLACK NEOPRENE BUNG (ITEM 26) HAS BEEN INSERTED INTO OVERLOAD STOP SCREW RECESS REMOVE EXCESS WITH SCALPAL BLADE.