Beta

C28 G

028000302

Ricambi / Spare parts

1	028000502	1	
2	028000509	1	
3	028000501	1	(3 serrature / 3 lock set)
4	028000504	1*	
5	028000507	1*	
6	024990221	1	(1 coppia /*1pair*)
7	024990223	1	
8	028000510	1	
9	028000511	1	
10	028000512	1	
11	028000513	1	
12	028000514	1	
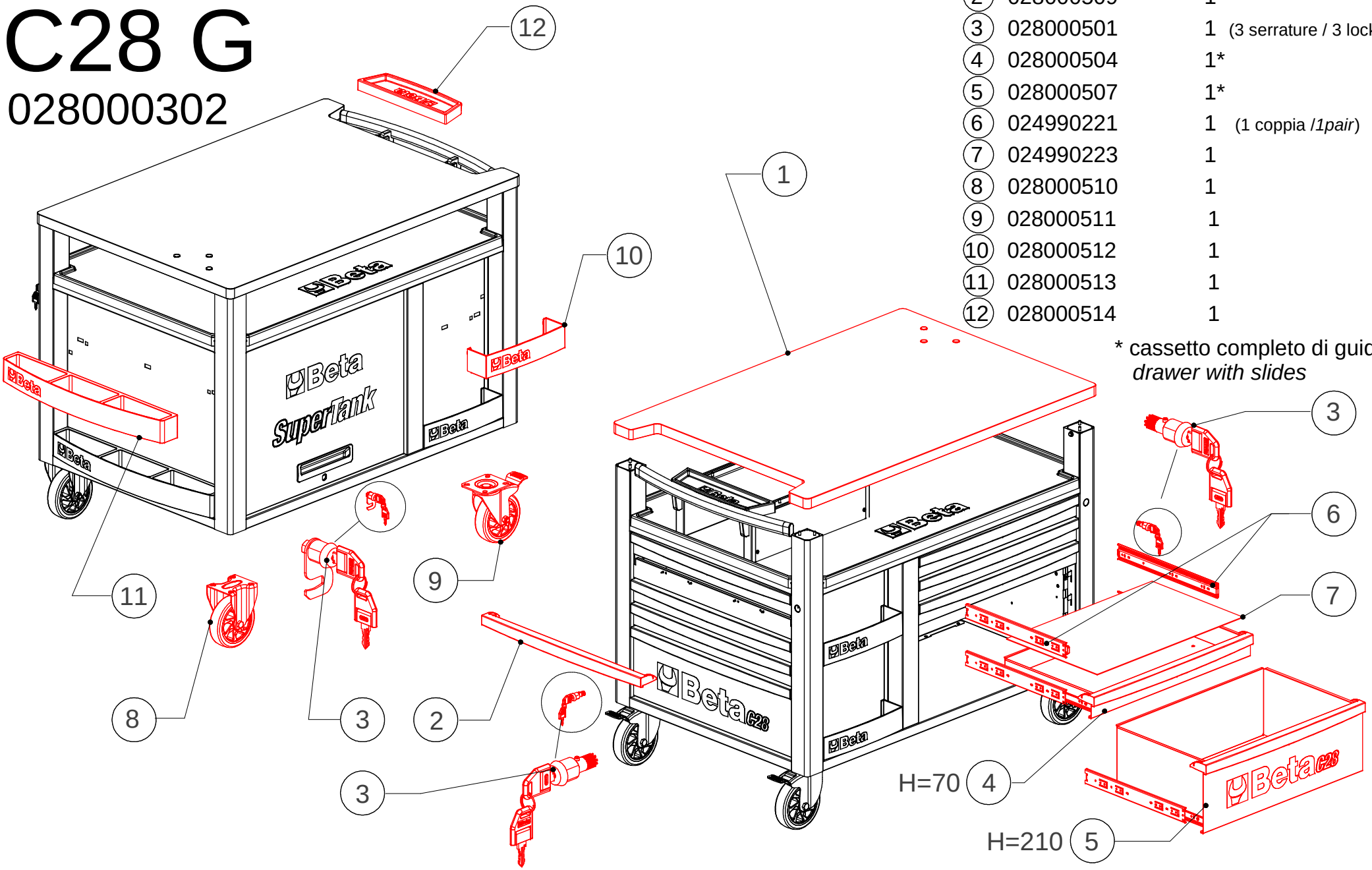
* cassetto completo di guide
drawer with slides